System No. C-AJ-2771

F Rating - 3 Hr
T Rating - 1-1/2 Hr
L Rating At Ambient - Less Than 1 CFM/sq ft
L Rating At 400 F - Less Than 1 CFM/sq ft

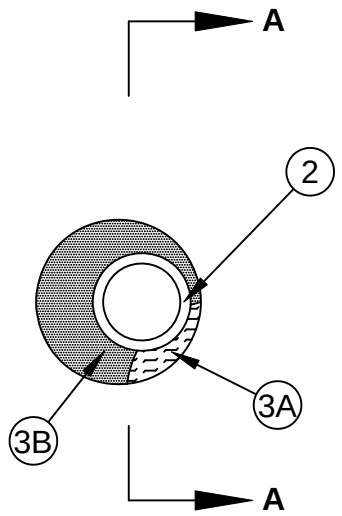

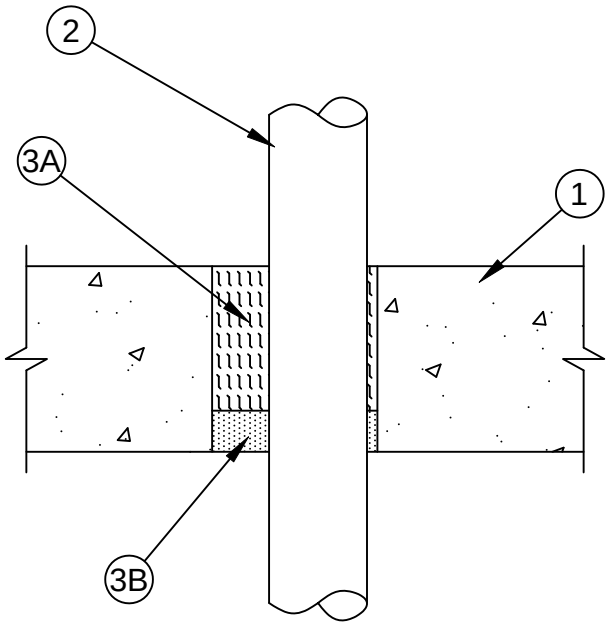

Section A-A

1. **Floor or Wall Assembly -** Min 4-1/2 in. (114 mm) thick reinforced lightweight or normal weight (100-150 pcf or 1600-2400 kg/m3) concrete. Wall may also be constructed of any UL Classified **Concrete Blocks***. Max diam of opening is 4 in. (102 mm).

   See **Concrete Blocks** (CAZT) category in the Fire Resistance Directory for names of manufacturers.

2. **Through Penetrant -** One nonmetallic pipe to be installed eccentrically or concentrically within the firestop system. The annular space between the pipe and the periphery of the opening shall be min 1/4 in. (6 mm) to max 1-3/8 in. (35 mm). Pipe to be rigidly supported on both sides of the floor or wall assembly. The following types and sizes of nonmetallic pipes may be used:

   A. **Polyvinyl Chloride (PVC) Pipe -** Nom 2 in. (51 mm) diam (or smaller) Schedule 40 cellular or solid core PVC pipe for use in closed (process or supply) piping systems.

   B. **Chlorinated Polyvinyl Chloride (CPVC) Pipe -** Nom 2 in. (51 mm) diam (or smaller) Schedule 40 or SDR 11 CPVC pipe for use in closed (process or supply) piping systems.

3. **Firestop System -** The firestop system shall consist of the following:

   A. **Packing Material -** Min 3-1/2 in. (89 mm) thickness of min 4 pcf (64 kg/m3) mineral wool batt insulation compressed and tightly packed into opening. Packing material recessed from the bottom surface of floor or both surfaces of wall to accommodate the required thickness of fill material.

   B. **Fill, Void or Cavity Material* - Sealant -** Min 1 in. (25 mm) thickness of fill material installed within annulus, flush with bottom surface of floor or both surfaces of wall assembly.

   SPECIFIED TECHNOLOGIES INC - SpecSeal Series SSS Sealant or SpecSeal LCI Sealant

   *** Indicates such products shall bear the UL or cUL Certification Mark for jurisdictions employing the UL or cUL Certification (such as Canada), respectively.**